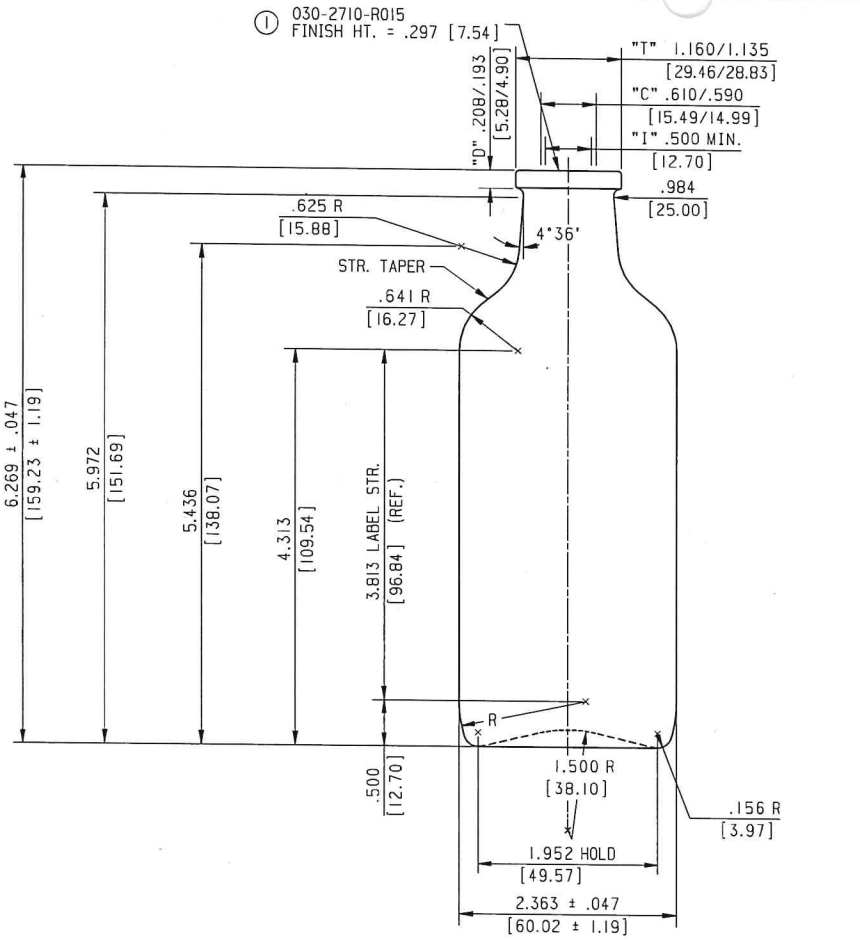

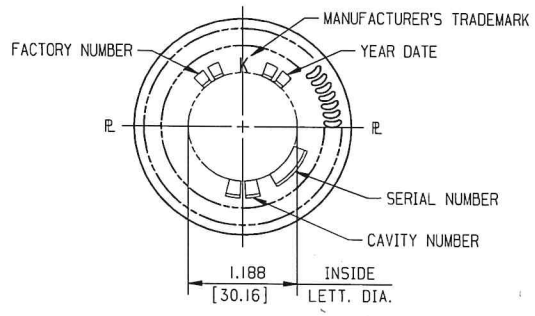

① THESE FINISH DIMENSIONS ARE BASED ON THE CURRENT FINISH SPECIFICATIONS AS OF THE ISSUE DATE OF THIS DRAWING.

BOTTOM PLATE LETTERING TO BE .156 [3.97] TALL EXCEPT CAVITY NUMBER TO BE .188 [4.76] TALL.

CRESCENT KNURLING TO APPEAR ON BEARING SURFACE.

-1	REMOVE KIMBLE NAME	SS	19-NOV-07
REVISIONS			

ALL LETTERING TO BE ROUND BOTTOM STYLE, RAISED IN GLASS, UNLESS OTHERWISE NOTED. CAPACITY VALUES BASED ON WATER AT 68°F [20°C]

METRIC SHOWN IN BRACKETS [ ]

O'FLOW CAPACITY 9.434 FL. OZ. ± 0.156 FL. OZ.

[279.00 ml ± 4.62 ml]

FILL POINT OVERFLOW

WEIGHT 7.000 OZ. ± 0.313 OZ. [198.45 g ± 8.86 g]

250 ML

DESC. ROUND - ANIMAL SERUM

DATE: 16-JAN-06 REF. NO. PI-19754-5

REDRAWN: SS GLASS TYPE I

GERRESHEIMER
1131 Arnold St.
Chicago Heights, IL 60411

DRAWING NUMBER KG-13311-1

MOLD NUMBER A-13311